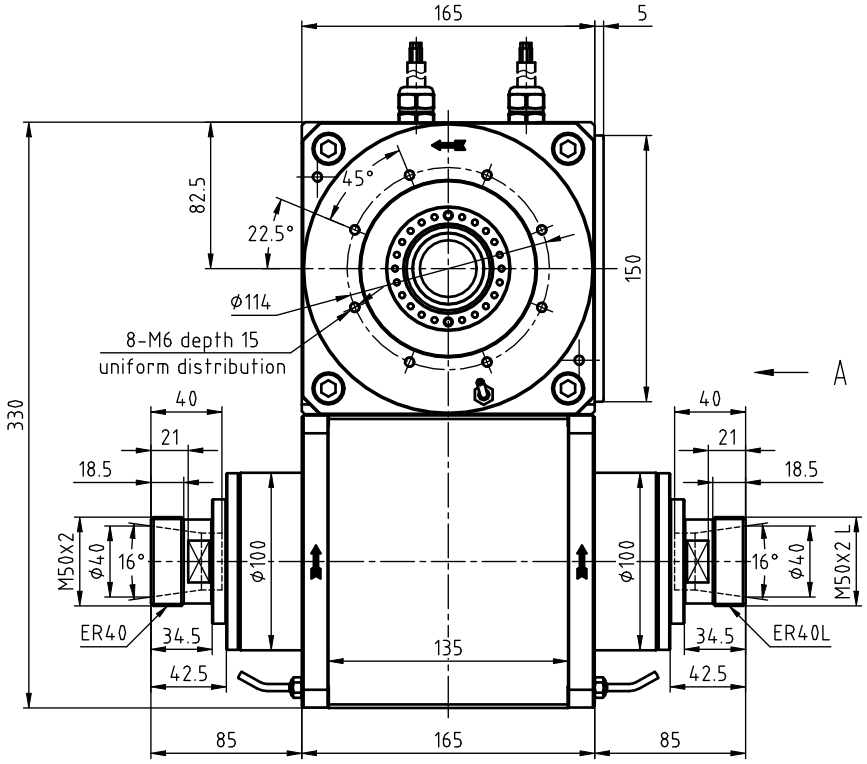

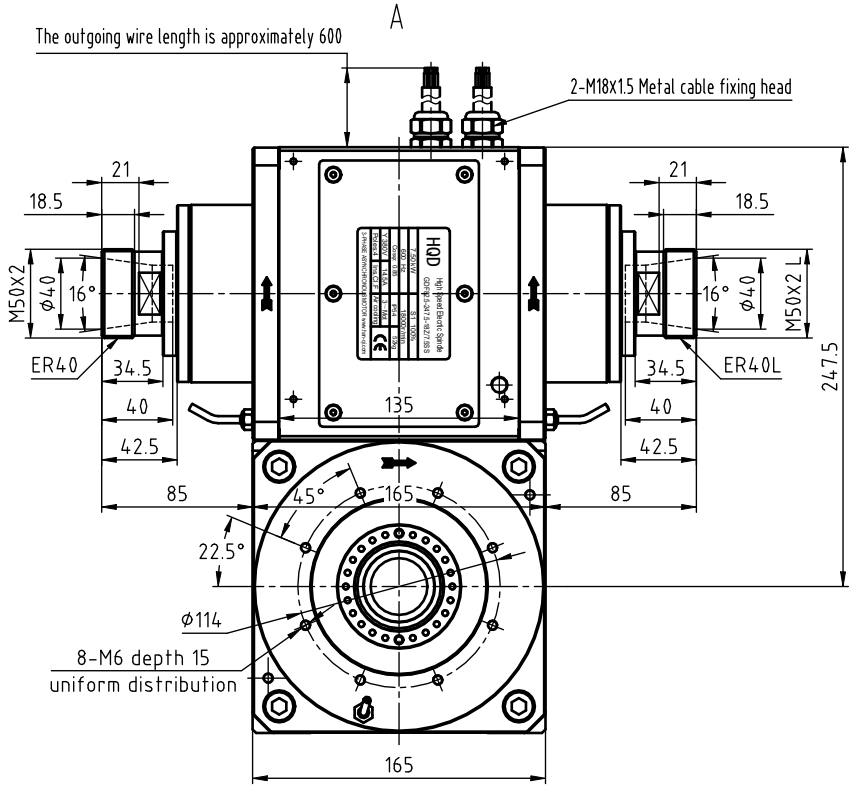

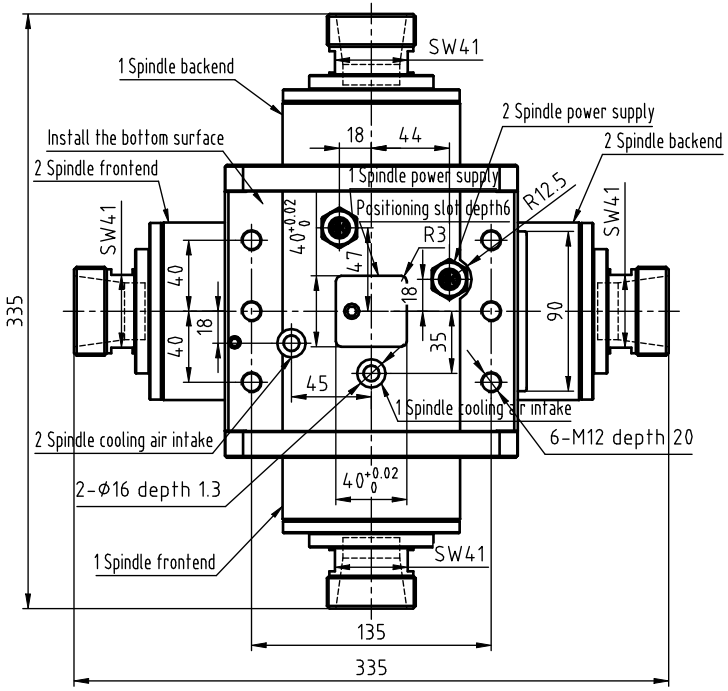

Technical specification:

1. The outgoing wire length is 600
2. Fit with 2 pieces of ER40UM-M50X2 nuts and 2 pieces of ER40UMZ-M50X2 left-hand thread nuts;
3. Equipped with one ER40-1/2 collet, one ER40-16 collet, and two ER40-20 collets;

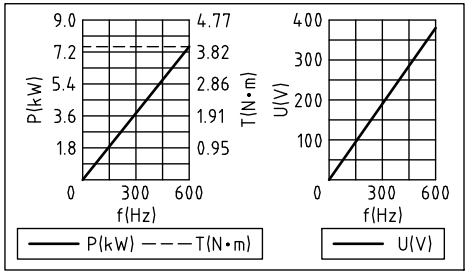

Interface description		
1 Spindle/ 2 Spindle power supply	a	U-phase
	b	V-phase
	c	W-phase
	d	Yellow-green grounding
	e	Thermistor
	f	Thermistor
1 Spindle cooling air intake	O-ring-Φ12.5X1.8	
2 Spindle cooling air intake	O-ring-Φ12.5X1.8	

Note: The cooling gas also serves as an air curtain seal; the gas source must be clean and dry

Model:GDF82.5-247.5-18Z/7.5SS			
Motor type	Three-phase asynchronous	Rated power	7.5kW
Rated Voltage	Y380V	Rated Current	14.5A
Rated frequency	600Hz	Rated speed	18000rpm
Rated torque	3.97N•m	Number of pole	4
Working system	S1	Insulation class	F
Cooling method	Air-cooled	Lubricating method	Grease lubrication
IP	54	Weight	52kg
Nut	ER40-M50X2/ER40L-M50X2 L		

Note: The main spindle 1 and the main spindle 2 share identical electrical parameters