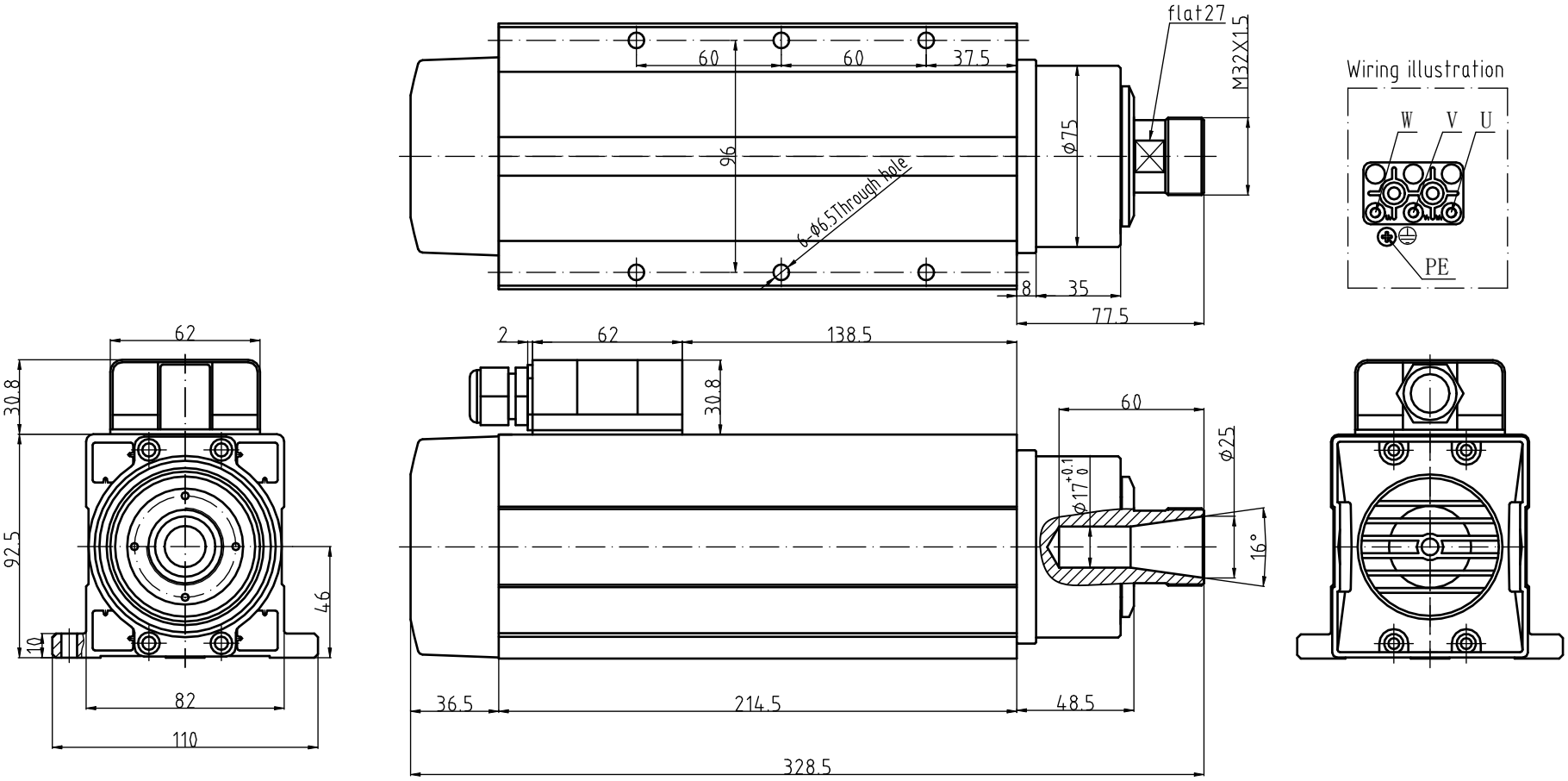

GDF46-18Z/3.5
Power 3.5kw
Voltage 380V
Current 7.0A
Frequency 300Hz
Rotational speed 18000r/min

Weight:8KG
ER Nut: ER25
Cooling method: Air cooling
Lubrication method of bearings:grease lubrication
Angular contact ball bearing with high precision:
2X7007C P4/2X7002C P4
Rotation direction:Counterclockwise viewed from the shaft extension

Notice:It shall apply thread adhesive or spring washer to prevent loosening while mounting fastening screw!