GDF35-18Z/0.75 Profile Drawing

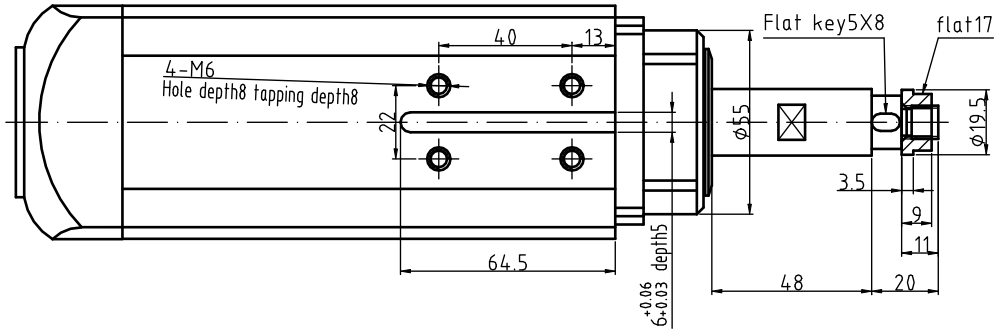

Wiring illustration

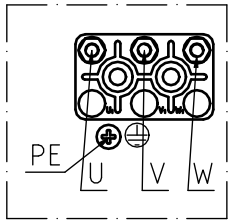

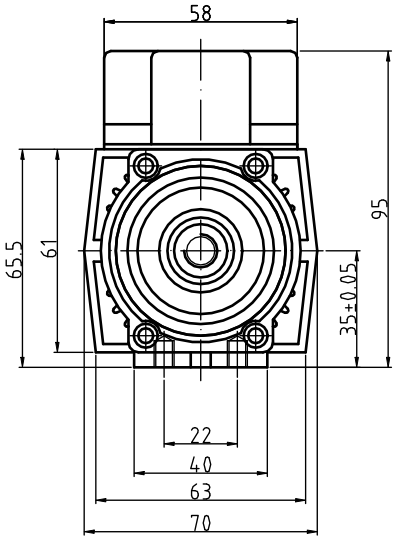

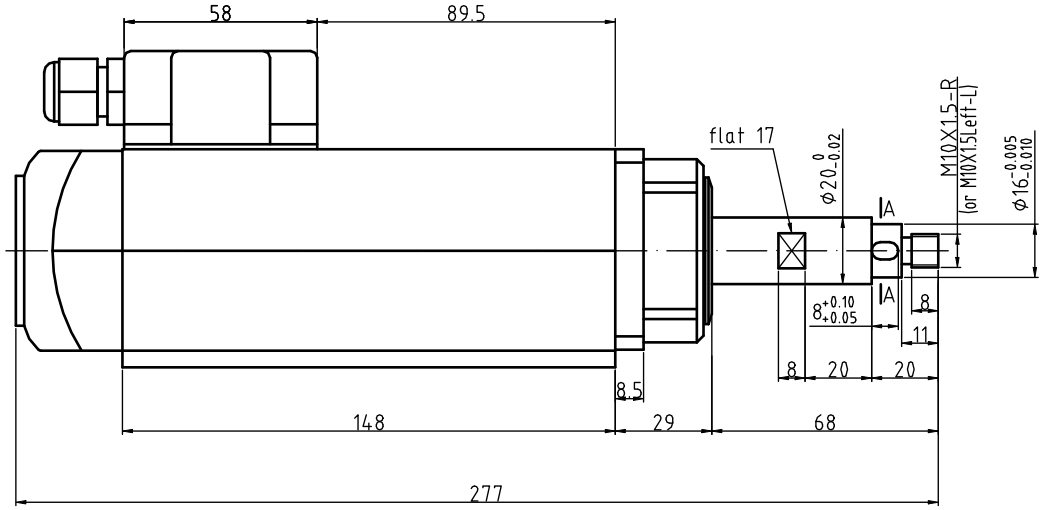

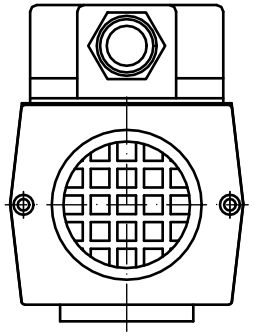

A-A

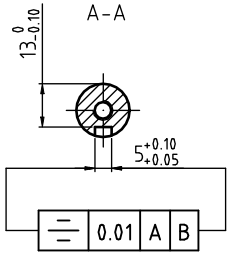

GDF35-18Z/0.75		Weight:3.0KG
Power	0.75kw	Shaft end connection:cylindrical key connection
Voltage	Y220V	Cooling Method:Air-cooling
Current	3.7A	Lubrication method of bearings:High temperature resistanc lubricating grease
Frequency	300Hz	High precision deep groove ball bearings:1X6005 1X6001/P4
Rotation	18000r/min	Rotation direction:It shall be applied in pairs with left-hand and right-hand threads

Technical requirements:

1.Precision: ϕ16 radial run-out is smaller than 0.005mm

2.Dynamic balance with full key:smaller than 0.6mm/s

Notice:It shall apply thread adhesive or spring washer to prevent loosening while mounting fastening screw.