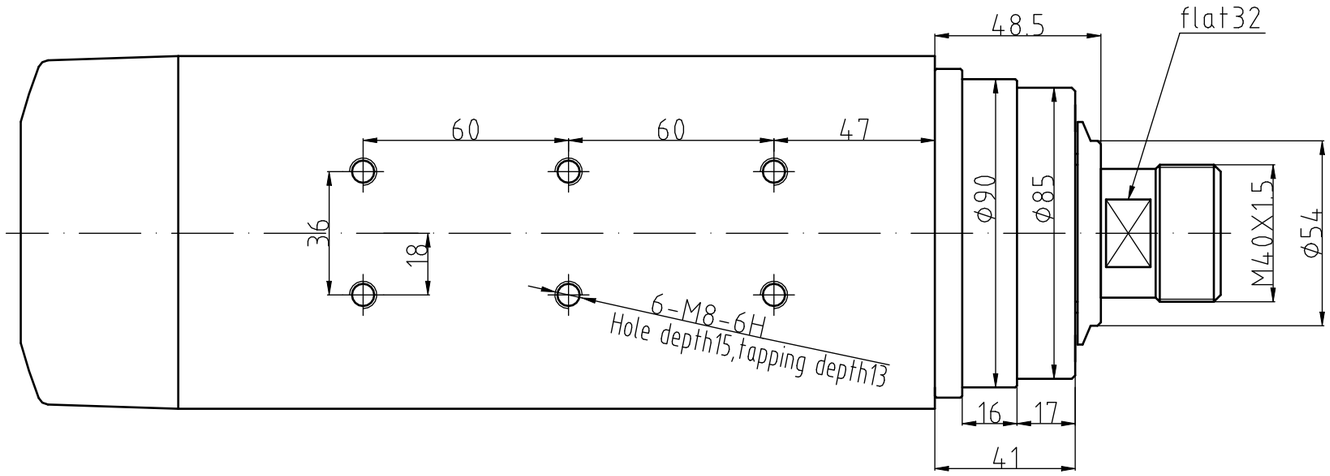

Wiring illustration

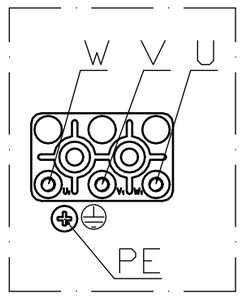

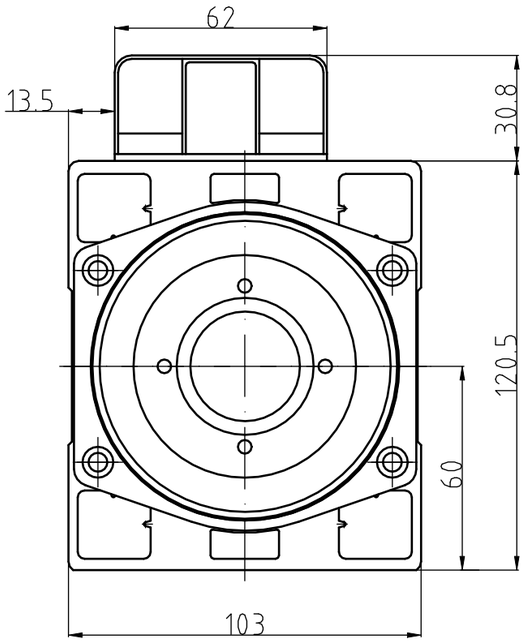

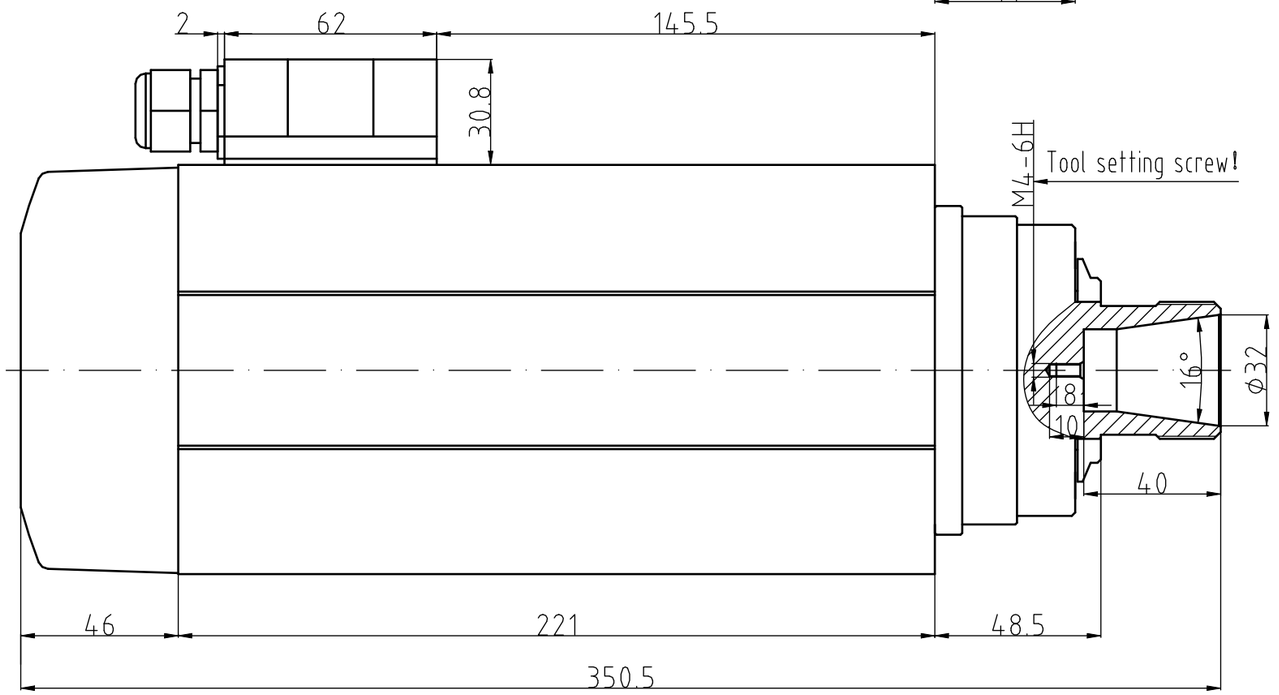

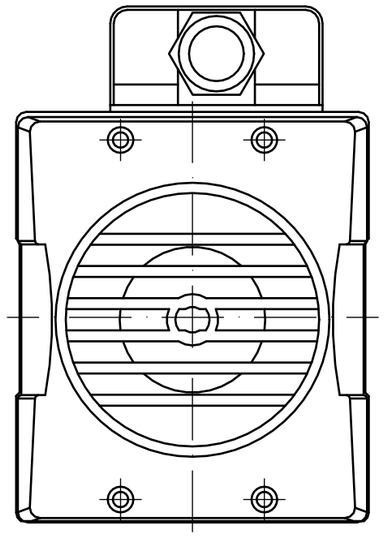

GDF60-18Z/6.0
Power 6.0kw
Voltage 380V
Current 12.0A
Frequency 300Hz
Rotational speed 18000r/min

Weight:13KG
ER Nut: ER32
Cooling method: Air cooling
Lubrication method of bearings:grease lubrication
Angular contact ball bearing with high precision:
2X7008C P4/2X7002C P4
Rotation direction:Counterclockwise viewed from the shaft extension

Notice:It shall apply thread adhesive or spring washer to prevent loosening while mounting fastening screw!